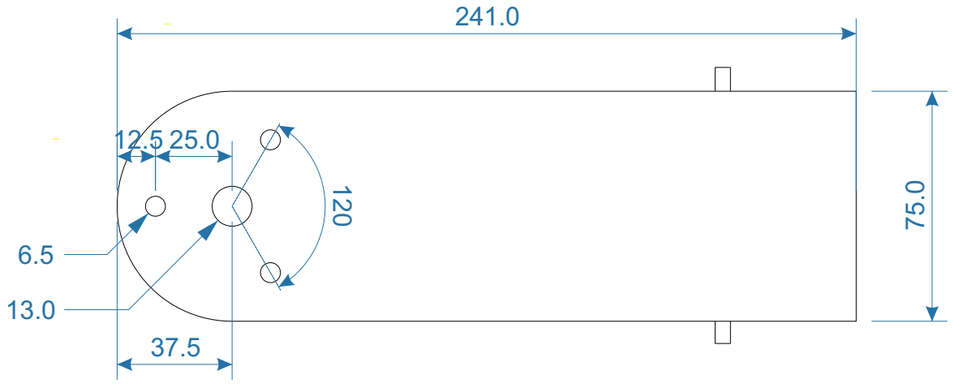

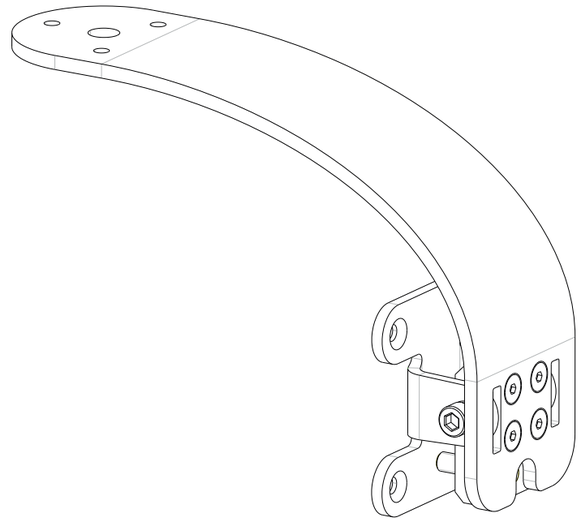

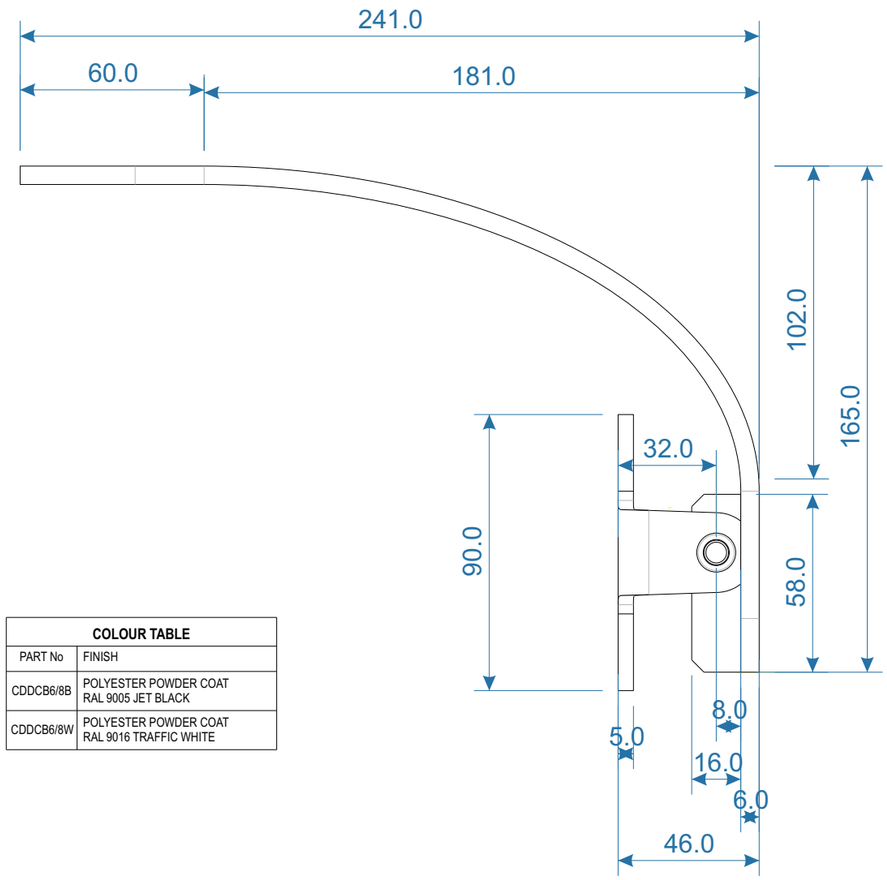

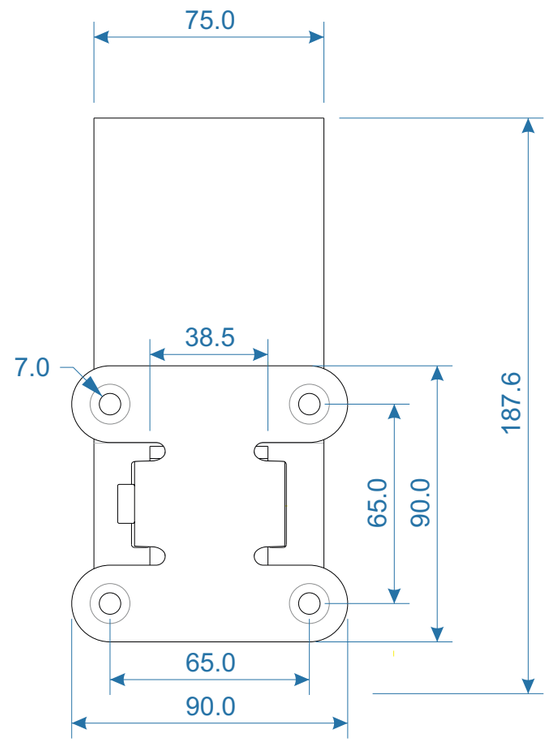

COLOUR TABLE	
PART No	FINISH
CDDCB6/8B	POLYESTER POWDER COAT RAL 9005 JET BLACK
CDDCB6/8W	POLYESTER POWDER COAT RAL 9016 TRAFFIC WHITE

CDD-6/8 CEILING BRACKET

© Martin Audio Ltd 2015